PF30NM

ondrives

Precision Gears

Worm Gear Reducers

Worm Gear Reducers

NEMA 23 Flange Input • 6mm Input Bore • 8mm Output Bore
30mm Centre Distance • T_{2max} 7Nm – 9Nm • ***10:1 - 120:1***

Worm Gear Rotation Direction.

RH-Right Hand

When input rotation is clockwise , output gear is pulled towards input.

When input is counter-clockwise , output gear is pushed away from input.

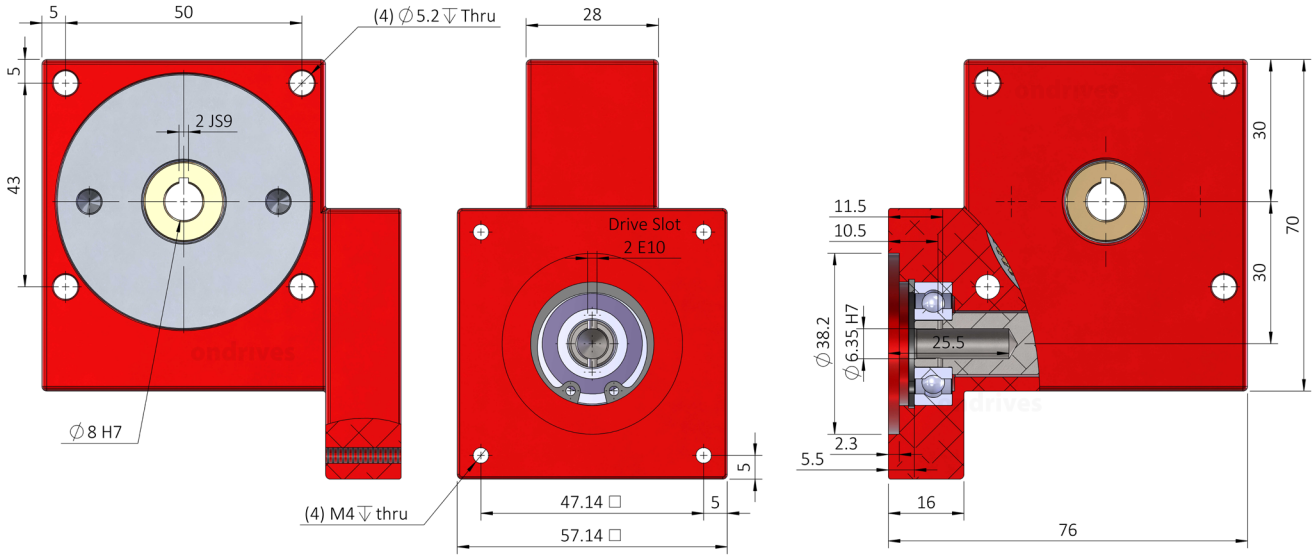

	Part Numbers					
Output Backlash j	**Output Backlash j A**	**Output Backlash j AR**	**Gear Ratio i**	**Efficiency ηz**	**Lead Direction**	**Reflected Inertia at Input**
≤0.50°	**≤0.13°**	**≤0.066°**		**n1nom**		**kg·m²**
PF30-10NM	PF30-10ANM	PF30-10ARNM	10:1	90%	Right Hand	$1.00x10^{-6}$
PF30-12NM	PF30-12ANM	PF30-12ARNM	12:1	88%	Right Hand	$9.25x10^{-7}$
PF30-15NM	PF30-15ANM	PF30-15ARNM	15:1	86%	Right Hand	$8.62x10^{-7}$
PF30-20NM	PF30-20ANM	PF30-20ARNM	201	84%	Right Hand	$8.13x10^{-7}$
PF30-30NM	PF30-30ANM	PF30-30ARNM	30:1	78%	Right Hand	$7.88x10^{-7}$
PF30-60NM	PF30-60ANM	PF30-60ARNM	60:1	70%	Right Hand	$7.67x10^{-7}$
PF30-120NM	PF30-120ANM	PF30-120ARNM	120:1	40%	Right Hand	$7.42x10^{-7}$

Weight: 0.59 kg.
Nom. Input Speed [S1 T_2n] n1nom: 1,000 min^{-1} (r/min)
Max. Input Speed n1max: 3,000 min^{-1} (r/min)
Lubrication: Grease Shell Gadus S5 V4P 2.5
Lubrication Temperature: Max. Operating ≈ 60°c
Max. Output Radial Load F_{r2} : 200N.
Max. Output Axial Load F_{a2} : 120N.

Testing in your application is necessary.
You will need to assess duty cycles and confirm suitability with your own calculations.
Figures listed are for guidance only.
Cooling may be needed dependent on application.

ondrives
Precision Gears
T: +44 1246 455500
sales@ondrives.com www.ondrives.com

Updated March 2024 subject to change for use as a guide only.

ondrives

Precision Gears

PF30NM

Worm Gear Reducers

NEMA 23 Flange Input • 6mm Input Bore • 8mm Output Bore
30mm Centre Distance • T_{2max} 7Nm – 9Nm • ***10:1 - 120:1***

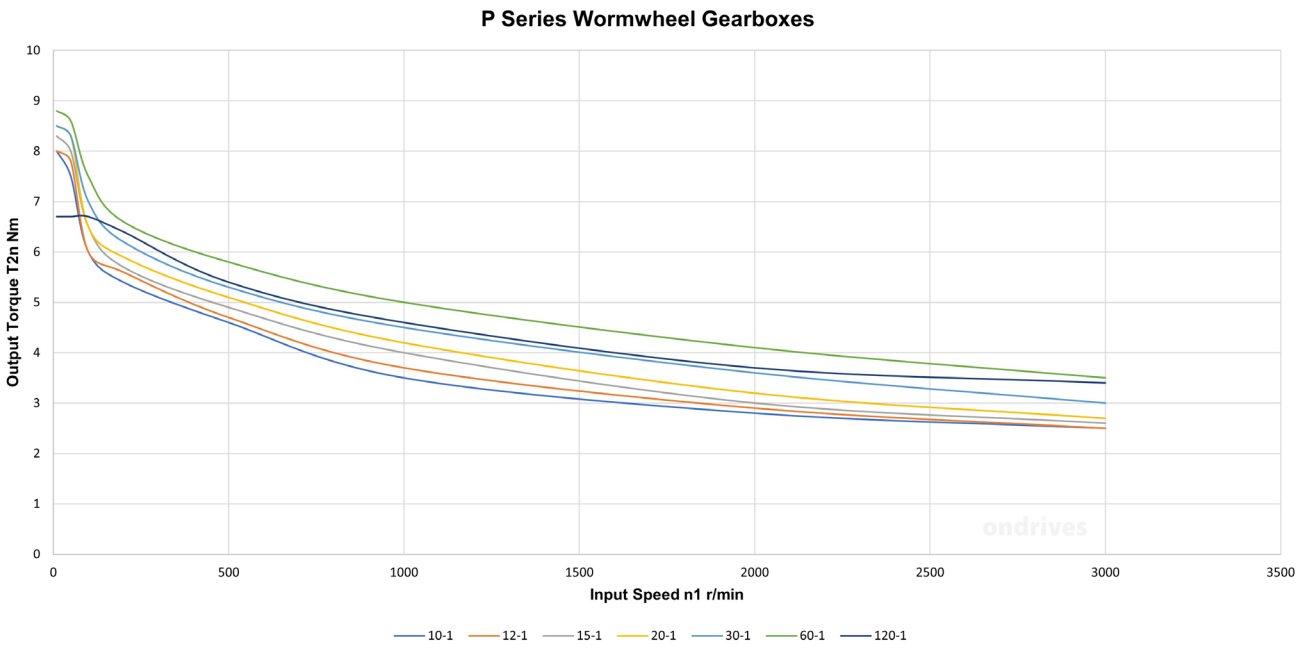

Worm Gear Reducers

ondrives
Precision Gears

T: +44 1246 455500
sales@ondrives.com www.ondrives.com
Updated March 2024 subject to change for use as a guide only.